CHRISTY LANE DEVELOPMENT

(A SUBDIVISION)
SECTION 13, T 44 N, R 12 W
CITY OF JEFFERSON
COLE COUNTY, MO

OWNERS: CHRISTY LANE DEVELOPMENT, INC. (DEED BOOK 400, PAGE 930)
ZONED: C-2, GENERAL COMMERCIAL DISTRICT
Subdivision Area = 236860.36 Sq. Ft. = 5.44 ACRES

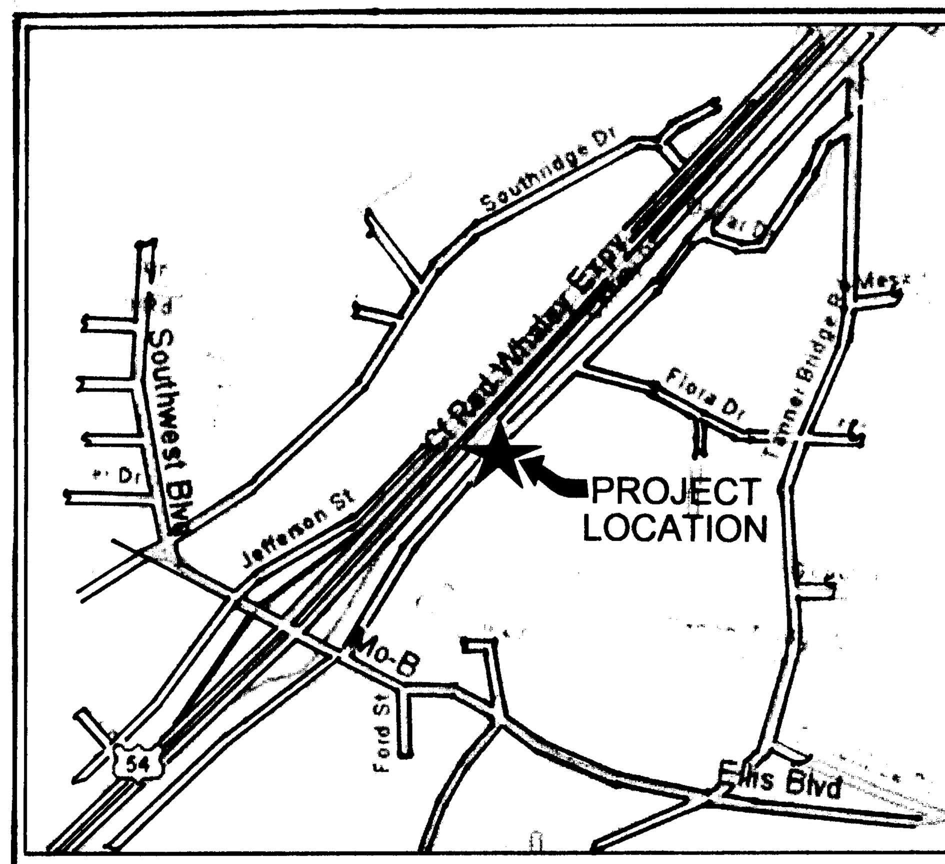

Location Map
N.T.S.

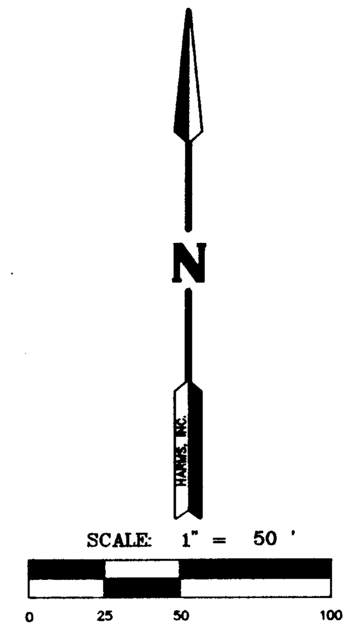

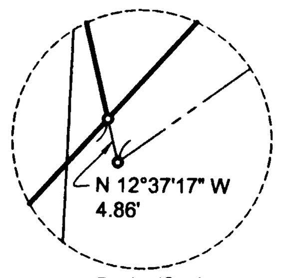

Detail A
Scale: 1"= 10'

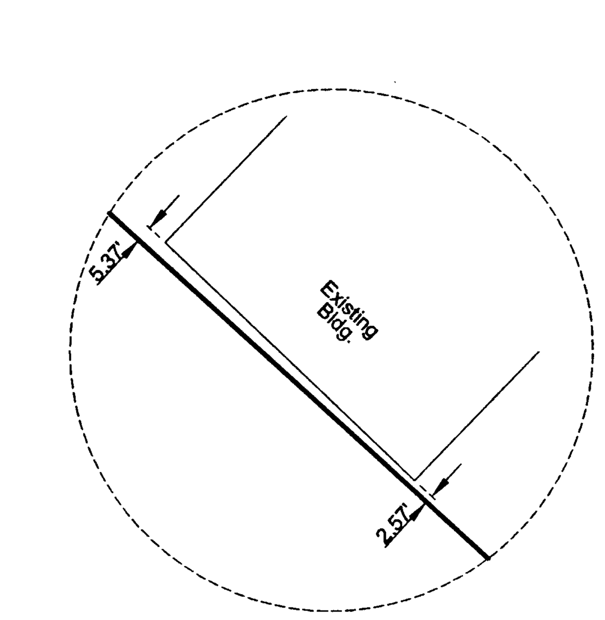

Detail B
Scale: 1"= 10'

Curve A-1 Data
L=44.52'
R=1112.28'
Lc=N 31°52'56" E
44.52'

Curve A-2 Data
L=60.80'
R=1112.28'
Lc=S 34°35'40" W
60.79'

Curve A Data
(A-1 + A-2)
L=105.32'
R=1112.28'
Lc=N 33°26'53" E
105.28"

Curve B Data
L= 26.64"
R=1112.28'
Lc=N 39°25'19" E
126.57'

Curve C Data
(A + B)
L=231.96"
R=1112.28'
Lc=N 36°42'34" E
231.53'

Curve Data
℄ East Outer Road
L=410.69'
R=1146.28'
Lc=N 32°24'59" E
408.63'

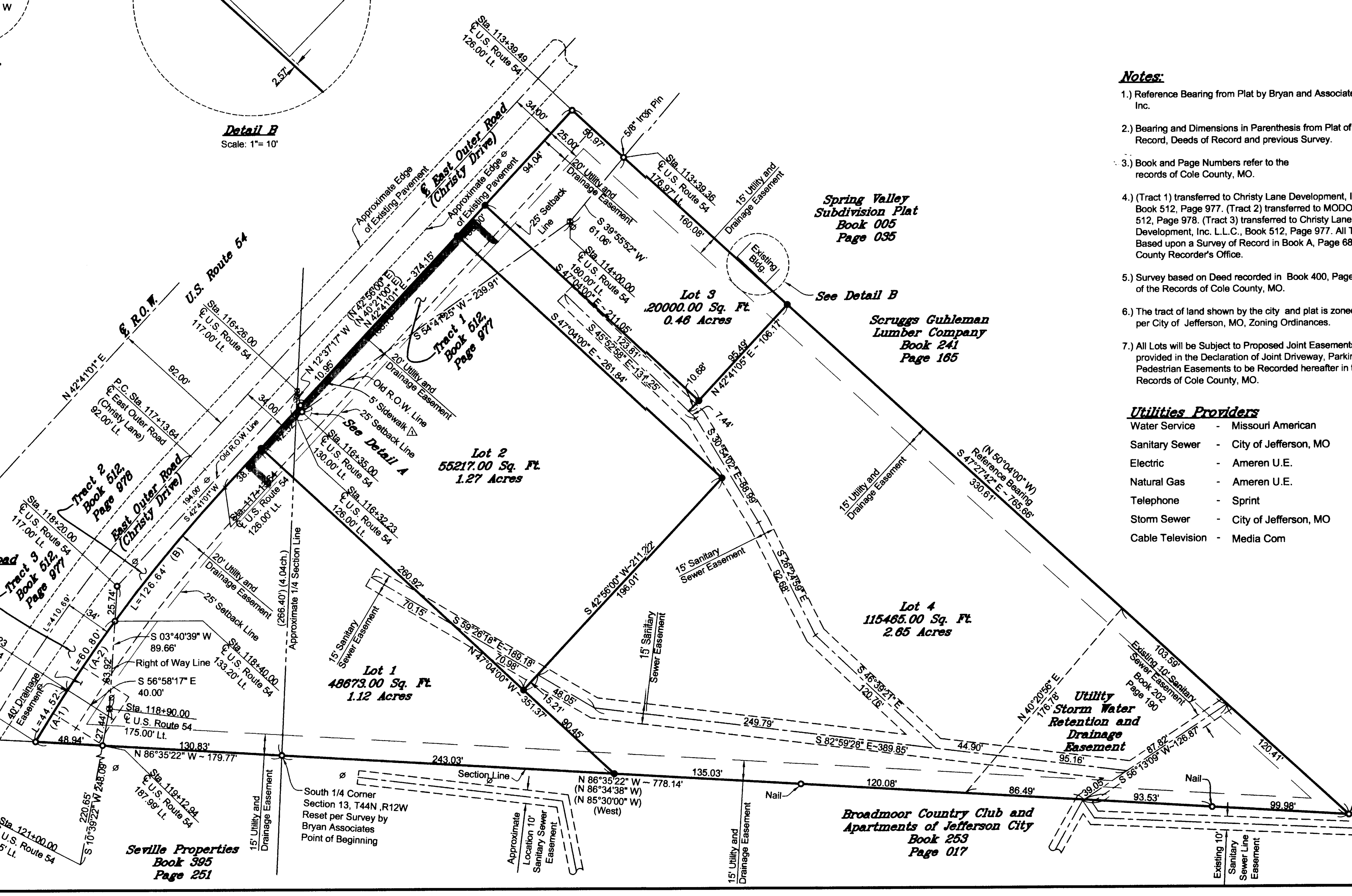

SURVEY DESCRIPTION

A tract of land situated in and being a part of the SW 1/4 of the SE 1/4 and the SE 1/4 of the SW 1/4 of Section 13, Township 44 North, Range 12 West; also being a part of the tract of land described by deed recorded in Book 400, Page 930 of the Records of Cole County, MO, and being the tracts of land described by deed recorded in Book 512, Page 977 of said Records of Cole County, MO; said tract being more particularly described as follows.

Beginning at the South 1/4 Corner of Section 13, T 44 N, R 12 W; thence N 86° 35' 22" W along the Section Line 179.77 feet, to a point 150.10 feet Easterly of or left of Centerline Station 119+43.92 of U.S. Route 54; thence in a Northerly direction along a curve to the right 231.96 feet, the radius being 1112.28 feet, the long chord being N 36° 42' 34" E, 231.53 feet to a point 126.00 feet Easterly of or left of Centerline Station117+13.64 of said U.S. Route 54; thence N 42° 41' 01" E, 374.15 feet to a point 126.00 feet Easterly of or left of Centerline Station 113+39.49 of said U.S. Route 54; thence S 47° 27' 42" E, along the Southerly Line and said Line extended of a tract of land described by plat recorded in Book 005, Page 035 of the Records of Cole County, MO, 765.66 feet; thence leaving said Southerly Line N 86° 35' 22" W along the Section Line 778.14 feet to the point of beginning.

Containing 236860.36 Square Feet or 5.44 Acres.

Subject to all easements and restrictions of record.

OWNER'S CERTIFICATION

KNOW ALL MEN BY THESE PRESENTS, that Christy Lane Development, Inc., a Missouri Corporation is the sole owner of the described tract of land and that said Christy Lane Development, Inc. caused said tract of land to be surveyed and caused a subdivision to be prepared thereof in the manner shown on the attached plats and that said tract of land is to be hereafter known as "Christy Lane Development, A Subdivision".

The easements and right-of-ways shown by the attached plat are dedicated to the City of Jefferson, Missouri, and to public use forever. All taxes due and payable against said property are paid in full.

IN WITNESS WHEREOF, I have hereunto set my hand ~~and affixed the Corporate Seal of said Christy Lane Development, Inc.~~ this 21st day of JANUARY, 2005.

NO SEAL

Christy Lane Development, Inc.
George Pate, President

ATTEST /secretary

NOTARY

STATE OF MISSOURI)
)SS
COUNTY OF Cole)

On this 21 day of January 2005, before me did appear George Pate, to me personally known, who being by me duly sworn, did say that he is a President of Christy Lane Development, Inc. a Missouri Corporation, and that the seal affixed is the Corporate Seal of said Corporation and that the foregoing instrument was signed on behalf of said Corporation and that said George Pate acknowledged said instrument to be the free act and deed of said Corporation.

IN WITNESS WHEREOF, I have hereunto set my hand and affixed my seal at my office in Cole County, Missouri, the day and year last above written.

NOTARY PUBLIC

CHERRY L. MEYER
Notary Public - Notary Seal
STATE OF MISSOURI
County of Cole
My Commission Expires Sept. 1, 2008

My Commission Expires 9-1, 2008

CITY OF JEFFERSON ENDORSEMENT

I, the City Clerk of the City of Jefferson, County of Cole, State of Missouri, hereby certify that this plat was approved by the Mayor of the City of Jefferson by Ordinance No. 13838.

Approved this 7th day of February, 2005.

John Landwehr, Mayor
Phyllis Powell, City Clerk

Patrick E. Sullivan, PE
Director of Community Development

Notes:

1.) Reference Bearing from Plat by Bryan and Associates, Inc.
2.) Bearing and Dimensions in Parenthesis from Plat of Record, Deeds of Record and previous Survey.
3.) Book and Page Numbers refer to the records of Cole County, MO.
4.) (Tract 1) transferred to Christy Lane Development, Inc. L.L.C., Book 512, Page 977. (Tract 2) transferred to MODOT, Book 512, Page 978. (Tract 3) transferred to Christy Lane Development, Inc. L.L.C., Book 512, Page 977. All Tracts Based upon a Survey of Record in Book A, Page 680, Cole County Recorder's Office.
5.) Survey based on Deed recorded in Book 400, Page 930 of the Records of Cole County, MO.
6.) The tract of land shown by the city and plat is zoned C-2 per City of Jefferson, MO, Zoning Ordinances.
7.) All Lots will be Subject to Proposed Joint Easements as provided in the Declaration of Joint Driveway, Parking, and Pedestrian Easements to be Recorded hereafter in the Records of Cole County, MO.

Utilities Providers

Water Service	-	Missouri American
Sanitary Sewer	-	City of Jefferson, MO
Electric	-	Ameren U.E.
Natural Gas	-	Ameren U.E.
Telephone	-	Sprint
Storm Sewer	-	City of Jefferson, MO
Cable Television	-	Media Com

Legend:

- Found Monument (As noted)
- Found Iron Pin (1/2", Except as Noted)
- Set Iron Pin (1/2", Except as Noted)
- R.O.W. Marker
- Tree w/ Size
- Telephone Riser
- Cleanout
- Water Valve
- Sewer Valve
- Street Light
- Fire Hydrant
- Power Pole
- Guy Wire
- Water Meter
- Electric Transformer
- Sewer Service
- Water Service
- Right of Way Line
- Center Line
- Deed Line
- Edge of Pavement
- Asphalt Surface
- Aggregate Surface
- Concrete Surface

SURVEYOR'S CERTIFICATE

This is to certify that I, Gerard J. Harms, Sr., Professional Land Surveyor in the State of Missouri, made a survey and subdivision of the above described tract of land at the request of George Pate, representing the owner, Christy Lane Development, Inc., that the attached plat represents the field work as completed in the month of August, 2004, and that said survey was executed in accordance with the requirements of the Missouri Minimum Standards for Property Boundary Surveys appearing at 4 CSR 30-16. and 10 CSR 30-2., adopted December 30, 1994, as amended October 30, 2003, and that said survey meets the requirements of a Urban Class Survey.

STATE OF MISSOURI GERARD J. HARMS SR NUMBER LS 1692 PROFESSIONAL LAND SURVEYOR

Gerard J. Harms, Sr. PLS 1692
October 8, 2004 LC 000095

1. Revised-Added Sidewalk-October 12, 2004
2. Easement and Deed Revisions-January 18, 2005
3. Removed Protective Covenants Reference - January 20, 2005

RECORDER'S CERTIFICATE

STATE OF MISSOURI)
)SS 200501948
COUNTY OF COLE)

Filed for record 22 day of February, 2005 at 8 O'clock and 22:49 Minutes A M., recorded at Book 12, Page 473

Larry D. Rademan Larry D. Rademan,
Cole County Recorder of Deeds

Dollie Fischerbacher
Deputy

missouri registered
ARCHITECTS
ENGINEERS
LAND SURVEYORS
HARMS, INC.

© Copyright Harms, Inc. 2004

p.o. box 52 eldon, mo 65026
(573) 392-3312

DATE	FB NO.
10/08/2004	S-367
SHEET	JOB NO.
1 of 1	03-5608-E

Drawing Name: 5608-E-Subdivision Plat.dwg

COPY

SUBD 459.00

\2003 Projects\5608-E-Subdivision Plat.dwg 1/20/2005 2:44:52 PM KWF